OTQSFP+-4SFP+-Xm

OptTech

Соединитель QSFP+ - 4 SFP+, Passive Cable, Xm

Особенности:

- QSFP 38-PIN and 4×SFP 20-PIN Connector
- медная витая пара
- низкое энергопотребление < 1.0W

Модели:

Model	Data Rate	Media type	Distance
OTQSFP+-4SFP+-1m	Up to 40G	Cable	Up to 1m
OTQSFP+-4SFP+-3m	Up to 40G	Cable	Up to 3m
OTQSFP+-4SFP+-5m	Up to 40G	Cable	Up to 5m

Применение

40/10G Ethernet

● Максимальные параметры

Parameter	Symbol	Min.	Typical	Max.	Unit
Storage Temperature	T_S	-40		+85	°C
Supply Voltage	$V_{CC}T$, R	-0.5		4	V
Relative Humidity	RH	0		85	%

Рекомендованные параметры

Parameter	Symbol	Min.	Typical	Max.	Unit
Case operating Temperature	T_C	0		+70	°C
Supply Voltage	$V_{CCT, R}$	+3.13	3.3	+3.47	V

Описание контактов QSFP+

Pin	Logic	Symbol	Name/Description	Ref.
1		GND	Ground	1
2	CML-I	Tx2n	Transmitter Inverted Data Input	
3	CML-I	Tx2p	Transmitter Non-Inverted Data output	
4		GND	Ground	1
5	CML-I	Tx4n	Transmitter Inverted Data Output	
6	CML-I	Tx4p	Transmitter Non-Inverted Data Output	
7		GND	Ground	1
8	LVTTL-I	ModSelL	Module Select	
9	LVTTL-I	ResetL	Module Reset	
10		VccRx	+3.3V Power Supply Receiver	2
11	LVCMOS-I/O	SCL	2-Wire Serial Interface Clock	
12	LVCMOS-I/O	SDA	2-Wire Serial Interface Data	
13		GND	Ground	1
14	CML-O	Rx3p	Receiver Inverted Data Output	
15	CML-O	Rx3n	Receiver Non-Inverted Data Output	
16		GND	Ground	1

17	CML-O	Rx1p	Receiver Inverted Data Output	
18	CML-O	Rx1n	Receiver Non-Inverted Data Output	
19		GND	Ground	1
20		GND	Ground	1
21	CML-O	Rx2n	Receiver Inverted Data Output	
22	CML-O	Rx2p	Receiver Non-Inverted Data Output	
23		GND	Ground	1
24	CML-O	Rx4n	Receiver Inverted Data Output	
25	CML-O	Rx4p	Receiver Non-Inverted Data Output	
26		GND	Ground	1
27	LVTTL-O	ModPrsL	Module Present	
28	LVTTL-O	IntL	Interrupt	
29		VccTx	+3.3V Power Supply Transmitter	2
30		Vcc1	+3.3V Power Supply	2
31	LVTTL-I	LPMode	Low Power Mode	
32		GND	Ground	1
33	CML-I	Tx3p	Transmitter Inverted Data Output	
34	CML-I	Tx3n	Transmitter Non-Inverted Data Output	
35		GND	Ground	1
36	CML-I	Tx1p	Transmitter Inverted Data Output	
37	CML-I	Tx1n	Transmitter Non-Inverted Data Output	
38		GND	Ground	1

Notes:

1. GND is the symbol for single and supply(power) common for QSFP modules, All are common within the QSFP module and all module voltages are referenced to this potential otherwise noted. Connect these directly to the host board signal common ground plane. Laser output disabled on TDIS >2.0V or open,

enabled on TDIS <0.8V.

2. VccRx, Vcc1 and VccTx are the receiver and transmitter power suppliers and shall be applied concurrently. Recommended host board power supply filtering is shown below. VccRx, Vcc1 and VccTx may be internally connected within the QSFP transceiver module in any combination. The connector pins are each rated for maximum current of 500mA.

- **Описание контактов SFP+**

Pin	Logic	Symbol	Name/Description	Note
1		VeeT	Transmitter Ground	
2	LV-TTL-O	TX_Fault	N/A	1
3	LV-TTL-I	TX_DIS	Transmitter Disable	2
4	LV-TTL-I/O	SDA	Tow Wire Serial Data	
5	LV-TTL-I	SCL	Tow Wire Serial Clock	
6		MOD_DEF0	Module present, connect to VeeT	
7	LV-TTL-I	RS0	N/A	1
8	LV-TTL-O	LOS	LOS of Signal	2
9	LV-TTL-I	RS1	N/A	1
10		VeeR	Reciever Ground	
11		VeeR	Reciever Ground	
12	CML-O	RD-	Reciever Data Inverted	
13	CML-O	RD+	Reciever Data Non-Inverted	
14		VeeR	Reciever Ground	
15		VccR	Reciever Supply 3.3V	
16		VccT	Transmitter Supply 3.3V	
17		VeeT	Transmitter Ground	
18	CML-I	TD+	Transmitter Data Non-Inverted	
19	CML_I	TD-	Transmitter Data Inverted	
20		VeeT	Transmitter Ground	

Note

1. Signals not supported in SFP+ Copper pulled-down to VeeT with 30K ohms resistor

- **Размеры**

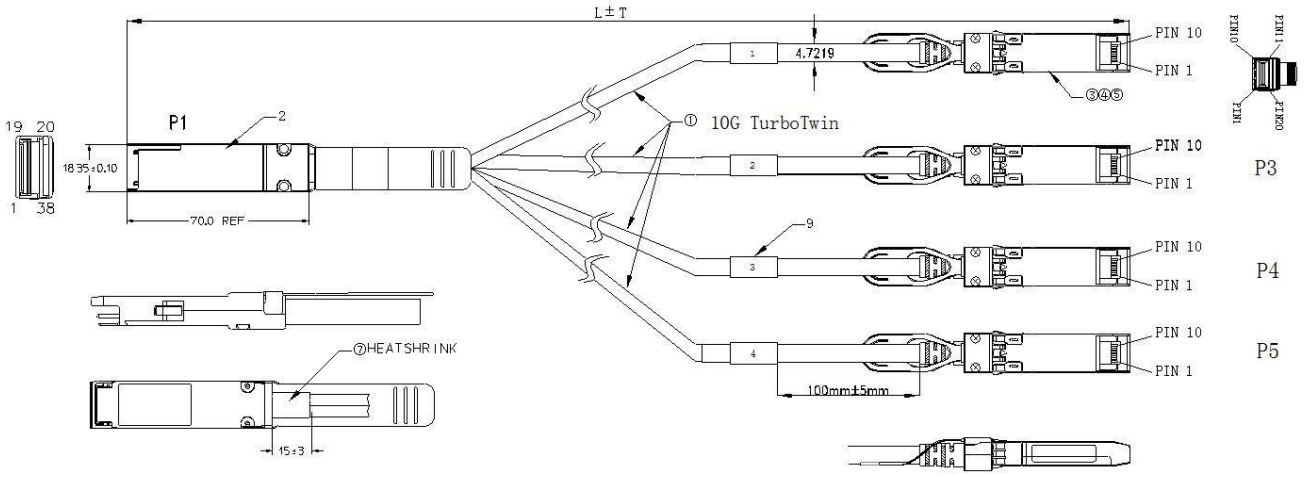
L±T
4.7219
PIN 10
PIN 1
③④⑤
① 10G TurboTwin
P1
2
19 20
1 38
18.35±0.10
70.0 REF
9
P3
P4
P5
⑦HEATSHRINK
15±3
100mm±5mm